ORTAL
YOUR LIFE. YOUR FIRE

40H70 LS

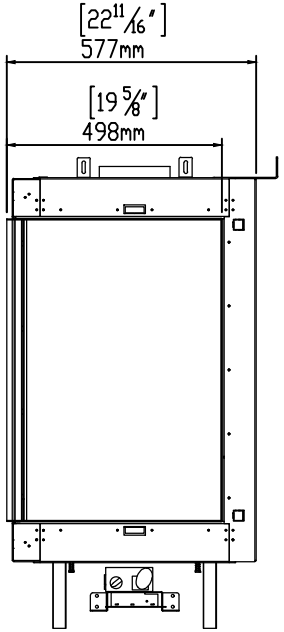

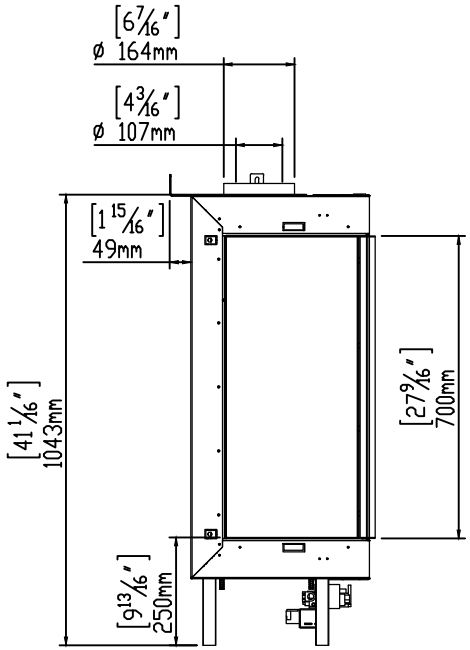

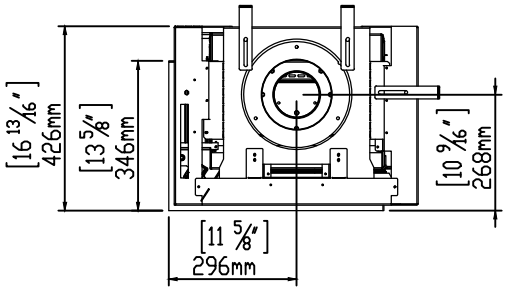

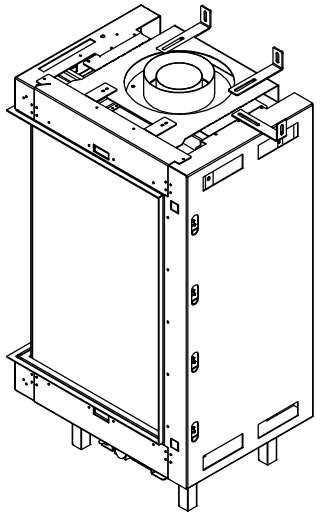

8/15/2018

Heat Barrier Options: Screen only