ORTAL
YOUR LIFE. YOUR FIRE

75 TS

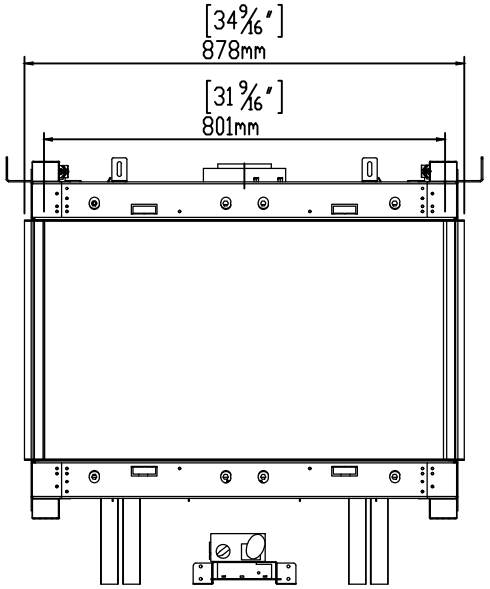

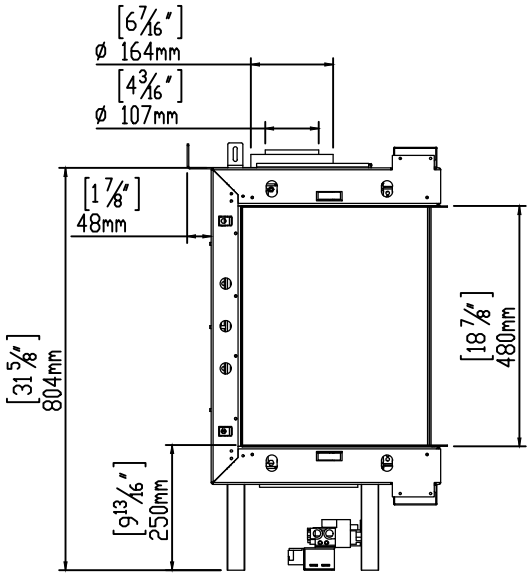

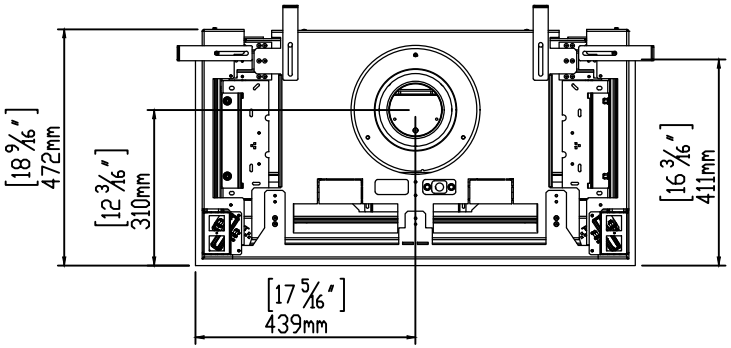

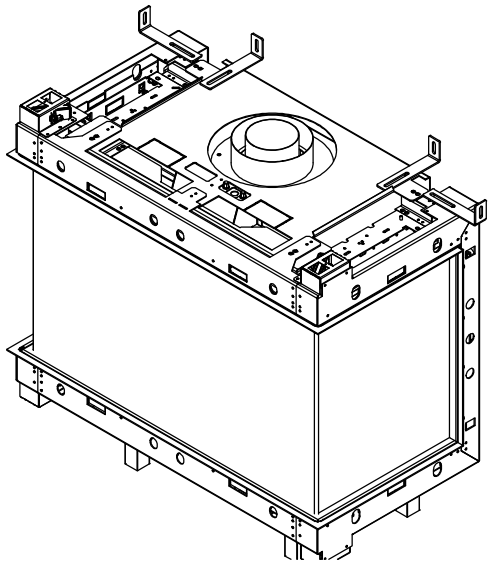

8/15/2018

Heat Barrier Options: Screen or Double Glass

*Double Glass comes with fans underneath the firebox that are not pictured here.