ORTAL
YOUR LIFE. YOUR FIRE

110H TS

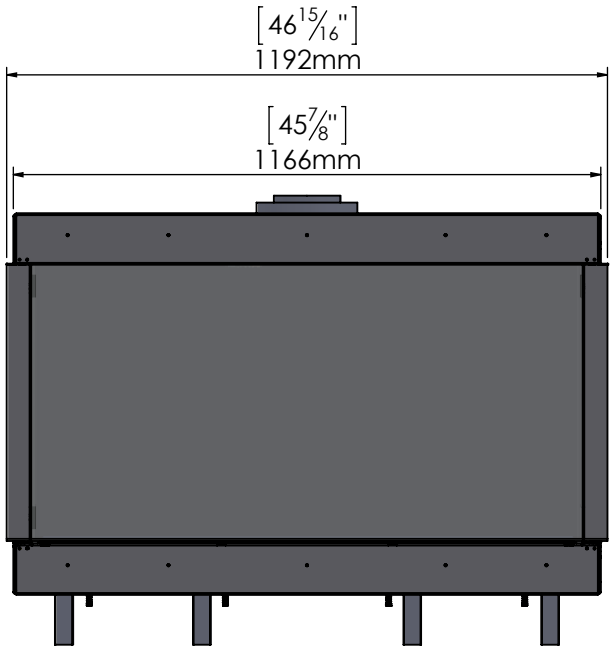

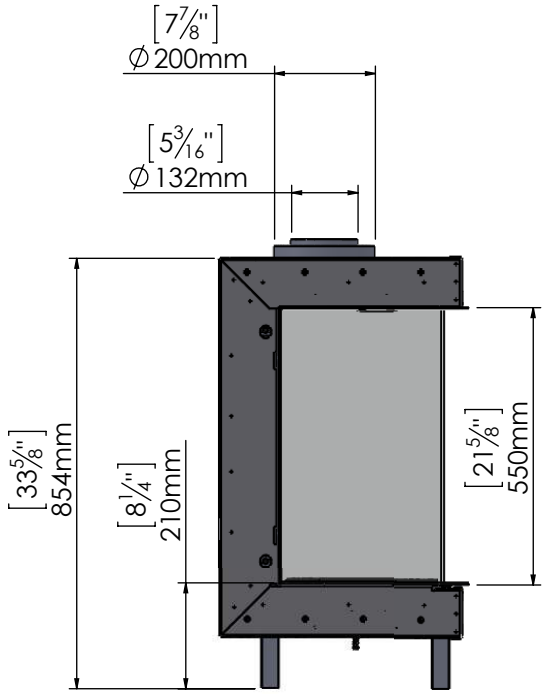

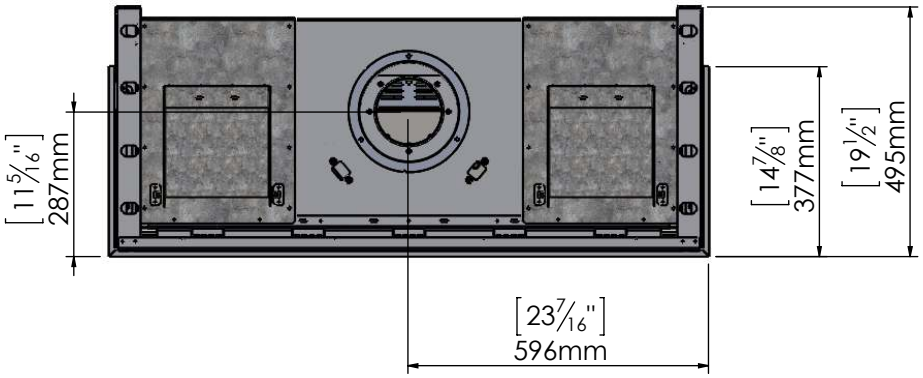

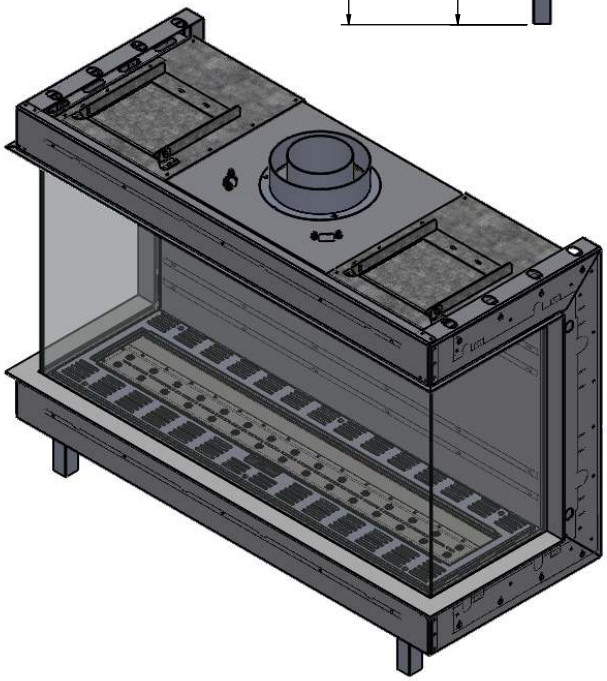

8/8/2017